Electrolux PROFESSIONAL

High Productivity Cooking Touchline tilting pressure braising pan, electric, 24 gal (90 lt)

ITEM #

MODEL #

NAME #

SIS #

AIA #



587021 (PUET09ECUU) Touchline tilting pressure braising pan, electric, 24gal capacity (90lt) - 208V/3p/60Hz

Short Form Specification

Item No.

AISI 304 stainless steel construction. GN compliant pan size; 0.7 " (18mm) thick pan bottom 0.6" (15mm) mild steel and 0.1" (3 mm) AISI 316 stainless steel. Insulated and counterbalanced lid. Motorized tilting with variable speed control. Pan can be tilted beyond 90° to completely empty the food. Safety thermostat protects the pan from overheating. A precise, electronic control of pan bottom temperature ensures fast reaction and exact adherence to preselected cooking temperatures between 122 and 482°F (50° and 250°C). Automatic steam elimination at the end of the cooking cycle.It can be used for poaching or steaming (with the lid open); simmering and boiling (with open or closed lid). TOUCH control panel. SOFT function. PRESSURE function. IPX6 water resistant. Configuration: Free-standing or Standing against a wall. Installation options (not included): floor mounted on 8" (200mm) high feet or a plinth which can be either steel or masonry construction.

Main Features

- Multifunctional cooking appliance used for roasting, pot-roasting, braising, simmering, boiling, pressure cooking and steaming.
- Pan size is GN compliant.
- Easy to clean cooking surface due to large-radius edges and corners.
- Thermoblock heating system for optimal temperature distribution and high temperature stability.
- Pan bottom with two individually adjustable heating zones, each with a temperature sensor.
- Safety mechanism prevents lid from opening, even in case of voluntary attempt, when cooking under pressure.
- Temperature sensors provides efficient temperature control: the power is supplied as and when required to keep the set temperature value without exceeding it.
- Safety valve on the lid avoids overpressure in the food compartment.
- Cooking with a working pressure of 6.5psi (0.45 bar) reduces cooking times.
- IPX6 water resistant.
- Optimum heat distribution in the food provides best cooking results in terms of taste, color and consistency and in terms of vitamin preserving.
- Overnight cooking: saving electricity and time.
- Motorized, variable pan tilting with "SOFT STOP". Tilting and pouring speeds can be precisely adjusted. Pan can be tilted over 90° to facilitate pouring and cleaning operations.
- "Pressure function": once the pressure lid is locked, the system automatically regulates itself.
- Built in temperature sensor to precisely control the cooking process.
- No overshooting of cooking temperatures, fast reaction.
- USB connection to easily update the software, upload/download recipes and download HACCP data.

Construction

- External panelling and internal frame made of 1.4301 (AISI 304) stainless steel.
- Multipurpose non-stick cooking surface in 0.75" (18 mm) thick compound: 0.1" (3 mm) shot-blasted 1.4404 (AISI 316L) stainless steel surface, seamlessly welded to the mild steel bottom.
- Double-lined insulated lid in 1.4301 (AISI 304) stainless steel mounted on the cross beam of the unit, counterbalanced by a hinge that remains open

APPROVAL:

Electrolux Professional, Inc.
www.electroluxprofessional.com
4003 Collins Lane Louisville, KY 40245 USA - fax number: 706-447-6228

Electrolux PROFESSIONAL
High Productivity Cooking Touchline tilting pressure braising pan, electric, 24 gal (90 lt)

in all positions.
- 0.6" (15 mm) thick heating layer concealed below the entire pan bottom, to provide high thermal diffusion and heat storage properties.
- Water mixing tap is available as optional accessory to make water filling and pan cleaning easier.
- Heatproof handle with non-slip surface.
- Front-mounted inclined led "TOUCH" control panel with recessed deep drawn casing, features self-explanatory display functions which guide operator throughout the cooking process: simultaneous display of actual and set temperature as well as set cooking time and remaining cooking time; real time clock; "SOFT" control for gentle heating up for delicate food; 9 power simmering levels from gentle to heavy boiling; timer for deferred start; error display for quick trouble-shooting.
- Pressure lid fitted with a proven fast-acting lock which is simple and safe in operation.
- "Boiling" or "Braising" mode functions.
- Minimised presence of narrow gaps for easier cleaning of the sides to meet the highest hygiene standards.
- Can be prearranged for energy optimisation or external surveillance systems (optional).
- 98% recyclable by weight; packaging material free of toxic substances.
- Model equipped with TDO valve available as special execution (S/code request)
- [NOT TRANSLATED]
- [NOT TRANSLATED]
- [NOT TRANSLATED]

User Interface & Data Management

- Connectivity ready for real time access to connected appliances from remote and data monitoring (requires optional accessory – contact the Company for more details).

Sustainability

- High-quality thermal insulation of the pan saves energy and keeps operating ambient temperature low.

Optional Accessories

• Dumpling strainer for 21/26 gallon kettles	PNC 910053	❑
• Scraper for "dumpling" strainer for kettles	PNC 910058	❑
• Suspension frame for Pressurized Tilting Braising Pans - 2 needed for 24 gallon units (587021, 587027) - 3 needed for 45 gallon units (587025, 587028)	PNC 910191	❑
• Base plate, for pressure braising pans and non-pressure braising pans, half size - 2 needed for 24 gallon units (587031, 587037, 587021, 587027) - 3 needed for 45 gallon units (587035, 587039, 587025, 587028)	PNC 910201	❑
• Perforated container with handles, height 4" (102mm)	PNC 910211	❑
• Perforated container with handles, height 6" (152mm)	PNC 910212	❑
• Perforated container with handles, height 8" (203mm)	PNC 911673	❑
• Left cover plate and mixing faucet for kettle (587040), and all braising pans (587037, 587039, 587031, 587035, 587027, 587028, 587021, and 587025)	PNC 911819	❑
• Spray gun for tilting units, height 27-1/2" (698.5mm) - factory fitted	PNC 912776	❑
• SCRAPER WITHOUT HANDLE (PFEX/PUEX)	PNC 913431	❑
• - NOT TRANSLATED -	PNC 913432	❑
• 4 flanged feet, 2", for prothermetic units (kettles, braising pans & pressure braising pans)	PNC 913438	❑
• - NOT TRANSLATED -	PNC 913575	❑
• - NOT TRANSLATED -	PNC 913577	❑
• Spray gun kit for free-standing ProThermetic Tilting units H=700 - US - Field Mounted	PNC 913579	❑

High Productivity Cooking
Touchline tilting pressure braising pan, electric, 24 gal (90 lt)

Front

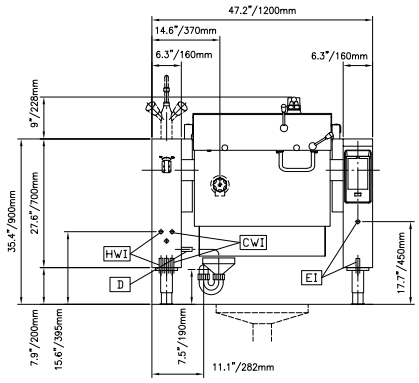

Side

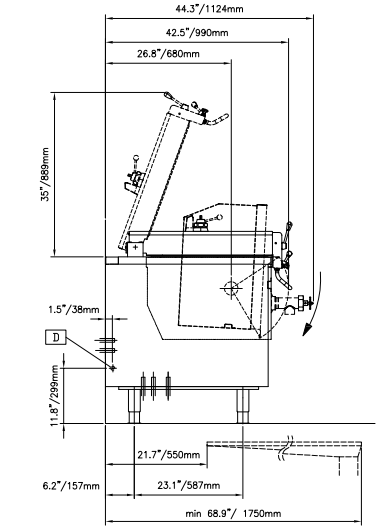

CWI1 = Cold Water inlet

D = Drain
EI = Electrical connection

Top

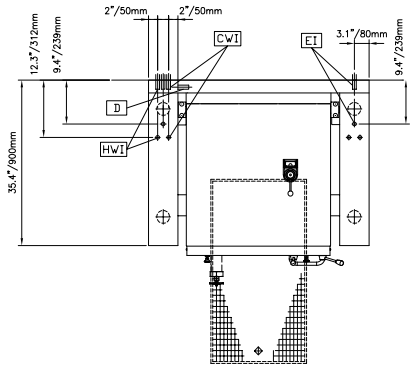

Electric

Total Amps:	
587021 (PUET09ECUU)	43 A
Supply voltage:	208 V/3 ph/60 Hz
Total Watts:	15.5 kW

Water:

Pressure:	29-87 psi (2-6 bar)
Drain line size:	1/2"
Incoming Cold/hot Water line size:	1/2"

Installation:

Type of installation:	FS on concrete base;FS on feet;On base;Standing against wall

Key Information:

Working Temperature MIN:	122 °F (50 °C)
Working Temperature MAX:	482 °F (250 °C)
External dimensions, Width:	47 1/4" (1200 mm)
External dimensions, Depth:	35 7/16" (900 mm)
External dimensions, Height:	27 9/16" (700 mm)
Net weight:	529 lbs (240 kg)
Shipping width:	51 9/16" (1310 mm)
Shipping depth:	49 5/8" (1260 mm)
Shipping height:	58 1/4" (1480 mm)
Shipping weight:	1003 lbs (455 kg)
Shipping volume:	86.26 ft³ (2.44 m³)
Configuration:	Rectangular;Tilting
Heating type:	Direct
Tilting mechanism:	Automatic

Intertek Intertek Intertek

The company reserves the right to make modifications to the products without prior notice. All information correct at time of printing.

2026.11.23